Fitting Instructions:
PURE Euro Waste Bin 400mm

www.questhardware.co.uk
01280 822062

PARTS

A. **N°1** Metal box
B. **N°1** Kit grass slides
C. **N°1** Kit slide cover
D. **N°2** Metal plate lid holder
E. **N°1** Lid
F. **N°1** Kit door fixing brackets
G. **N°2** Door fixing cover
H. **N°4** Stopper
L. **N°2** Wastebin Lt.32

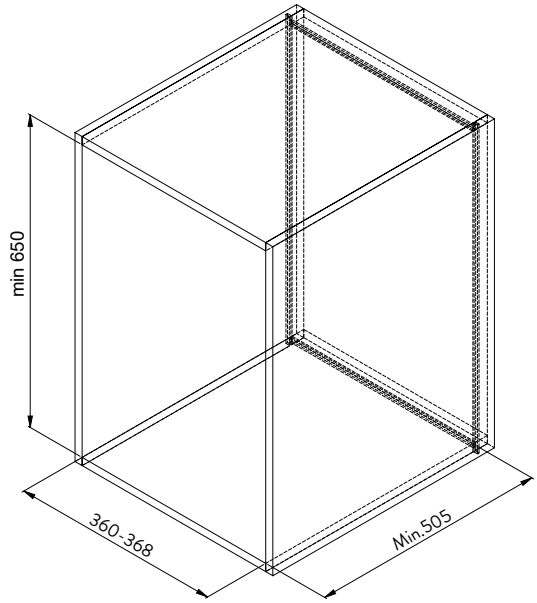

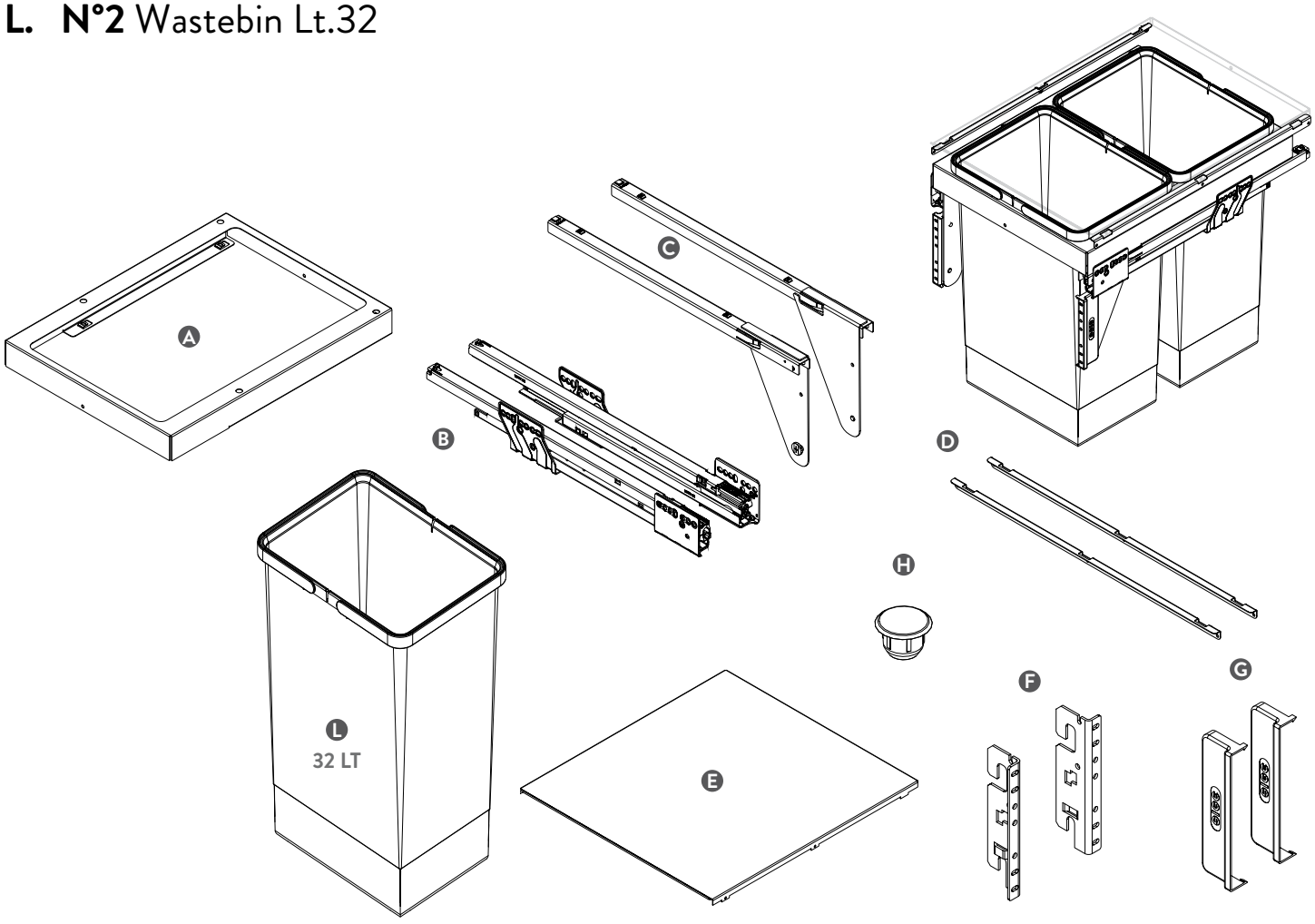

N°4 3.9x13 N°8 4x16

1

Fix the Grass slides C and the metal plate lid holder D according to the dimentions.

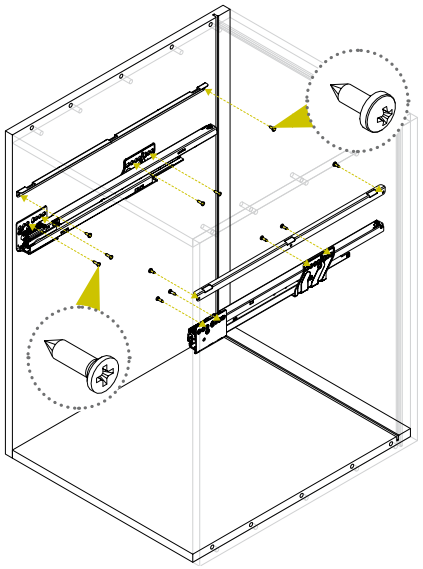

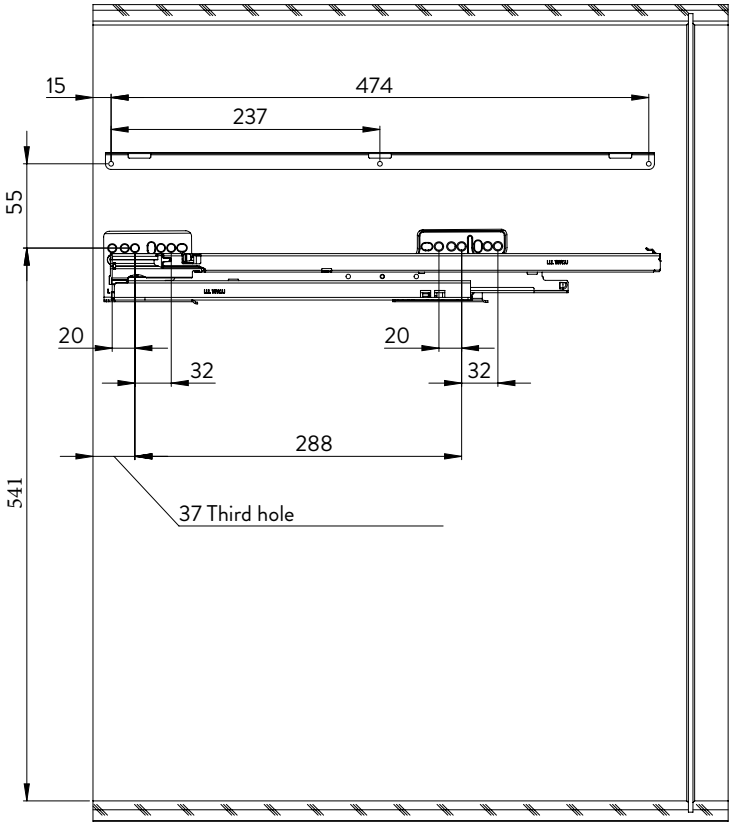

2

Put the kit slide carter C into the Grass slides B.

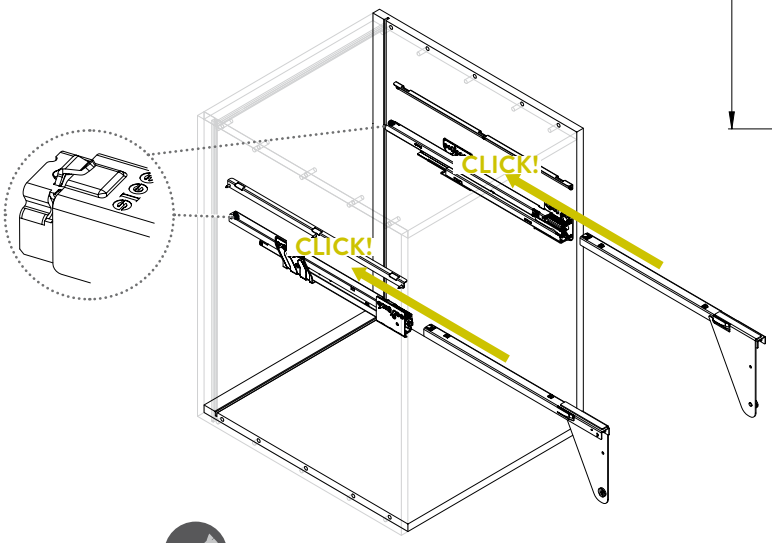

N°4 M4x5

3

Screw the metal box A into the kit slide carter C by using the specific provided screws.

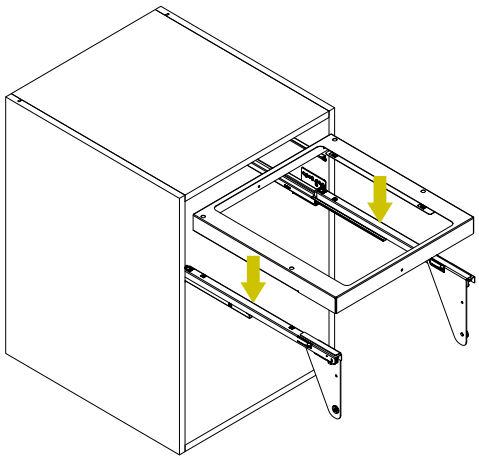

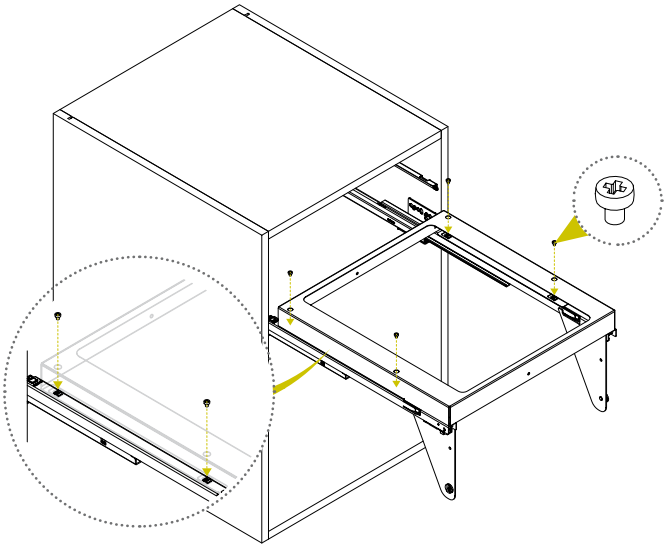

4

N°6 3,9x13

Assemble the kit door fixing brackets F according to the dimentions.

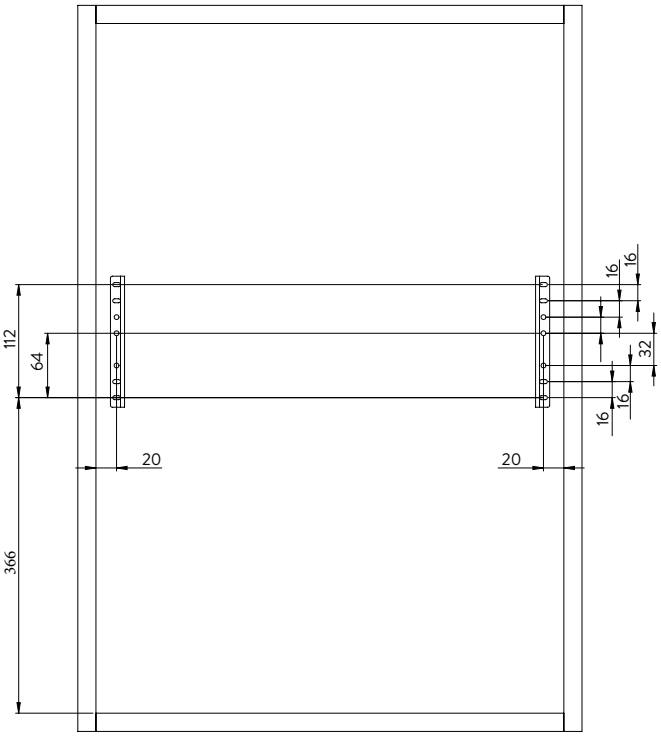

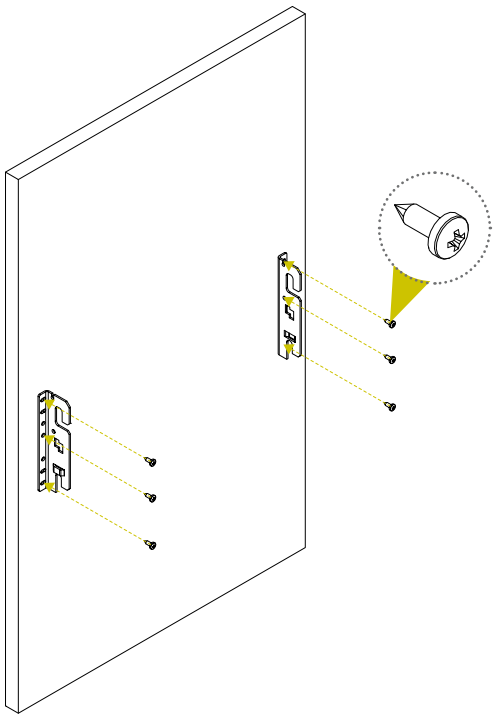

5

N°2 M6x10

Pre-assemble the M6x10 screws and washers than mount the door on the carter C as shown.

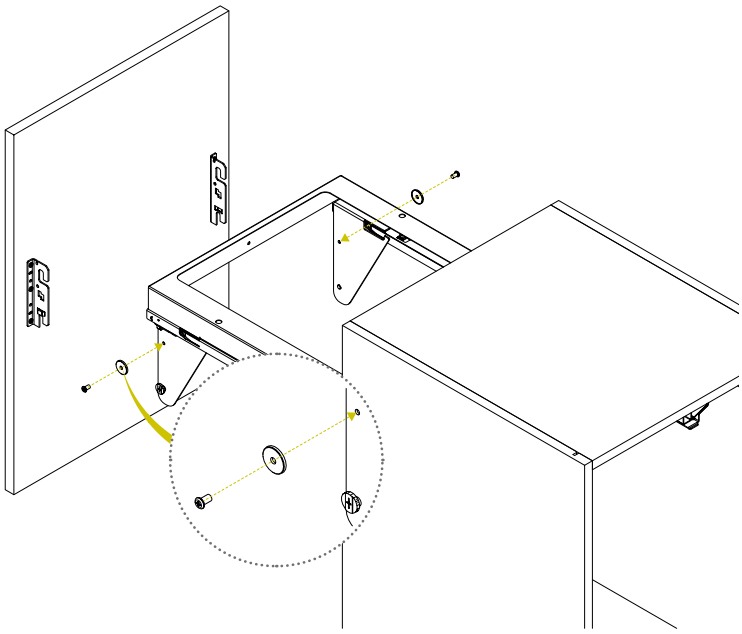

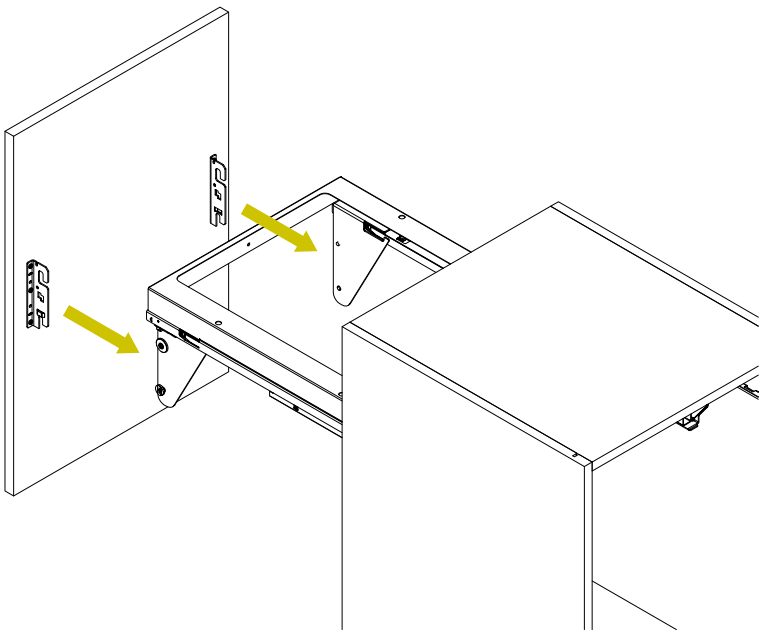

6

Adjust the door up and down by turning the eccentric screw. .

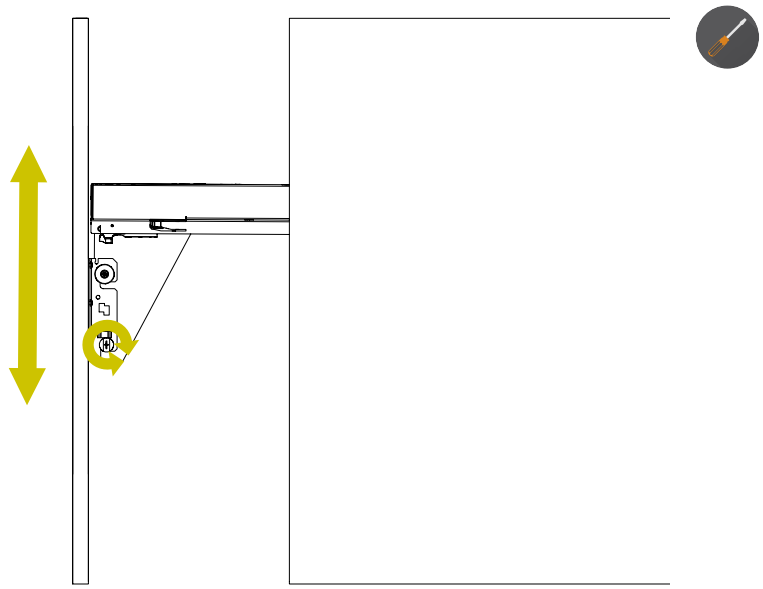

7

Adjust the door inclination to the front or to the back, than tight the two M6x10 screws.

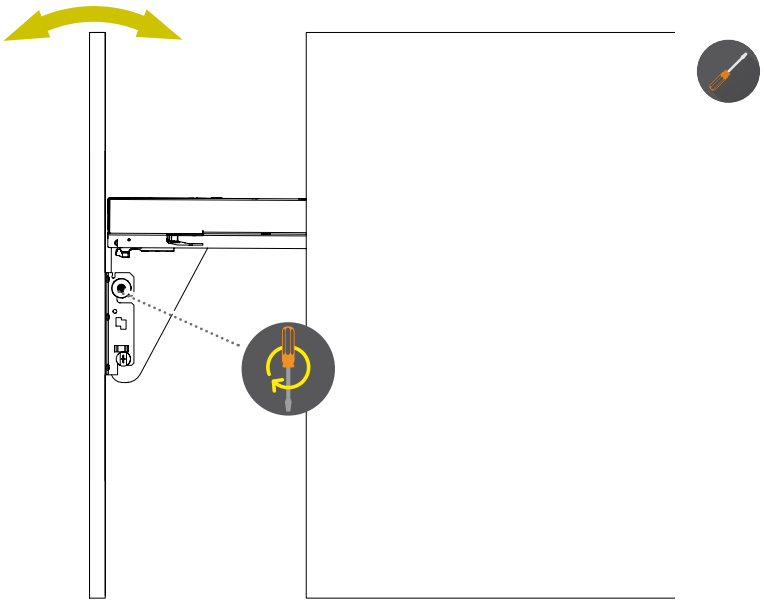

8

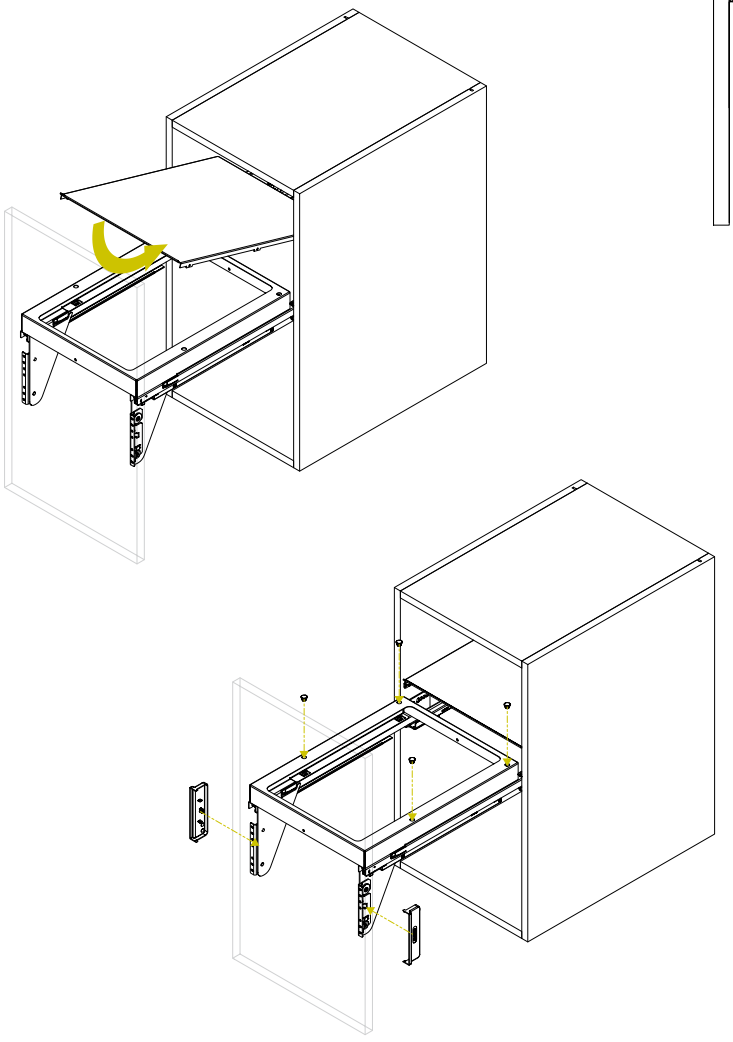

9

