Knapp FIYU®

Knock-and-Plug in Connector

UK Exclusive Supplier

UK Exclusive Supplier



NEW Product

t 01280 822062 **e** sales@qs-sales.com **www** questhardware.co.uk

Knapp Fiyu®

Plug in connection on tongue and groove basis for furniture and fittings

FIYU® Fast



(Optional)

System Advantages

- Plug-in connection on tongue and groove basis for immediate stability
- Tight and precise guidance
- Manual and industrial processing
- Stackable
- High clamping force and 100% perfect fit
- Safety due to high load capacity
- Loadable in two directions

	Description
1	**FIYU® Fast - Spreading lamella**
2	Fixing edge
3	Cutting Edges
4	Guide pin
5	Spring hook
6	**FIYU® Fast - Clamping lamella**
7	Cutting edges
8	Spring hook receiver
9	Slots for guide pins
10	Optional grub screw 6 x 12mm

FIYU® Lock

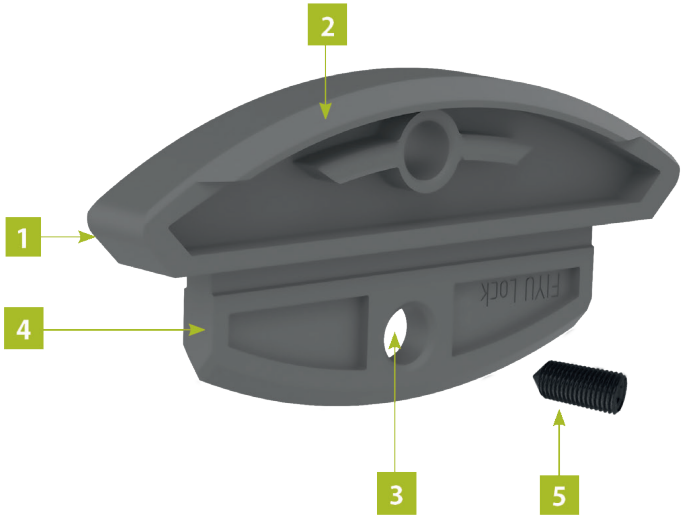

(Optional)

System Advantages

- For material thickness from 16mm with the one plug-in part
- Retrofitting installation of shelves as shelf supports
- Flexible assembly sequence
- Fast and easy disassembly

	Description
1	**FIYU® Lock - half-moon shaped plug-in part**
2	Cutting edges
3	Hole for optional fixation
4	Spring lamella (4mm)
5	Optional grub screw 6 x 12mm

Milling depths and groove widths

(All dimensions in mm)

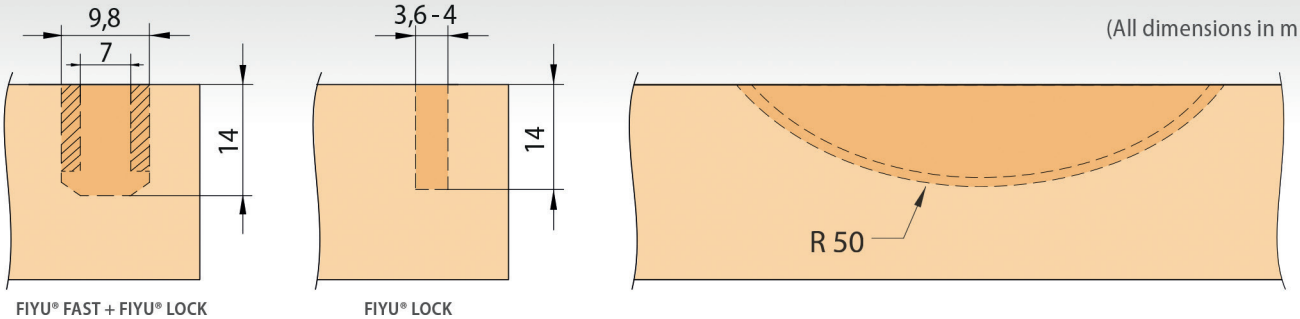

FIYU® FAST + FIYU® LOCK

FIYU® LOCK

t 01280 822062 **e** sales@qs-sales.com **www** questhardware.co.uk

Tongue and groove connections for furniture and fittings

FIYU® - safe, fast and reversible

FIYU® - Featuring an innovative design and ground braking details, the FIYU® is the ultimate plug-in connector.

the Knapp FIYU® not only connects securely and quickly, it is is the perfect solution for countless areas of application. It connects cabinet parts from an angle of 0 to 135°. The FIYU® LOCK is the perfect solution for retrofitting shelves. Saving time and money the FIYU® features an optional, one-piece connector, which can fix the components with a clamping screw.

FIYU® FAST: A breakthrough in cabinet assembly. Self-tensioning connector for miter and 90° joints. Also serves as a gluing aid. Efficient and versatile solution.

Installation



Drive in the connector flush with the board using the insert tool.







Use a rubber hammer to release the self-tightening mechanism.

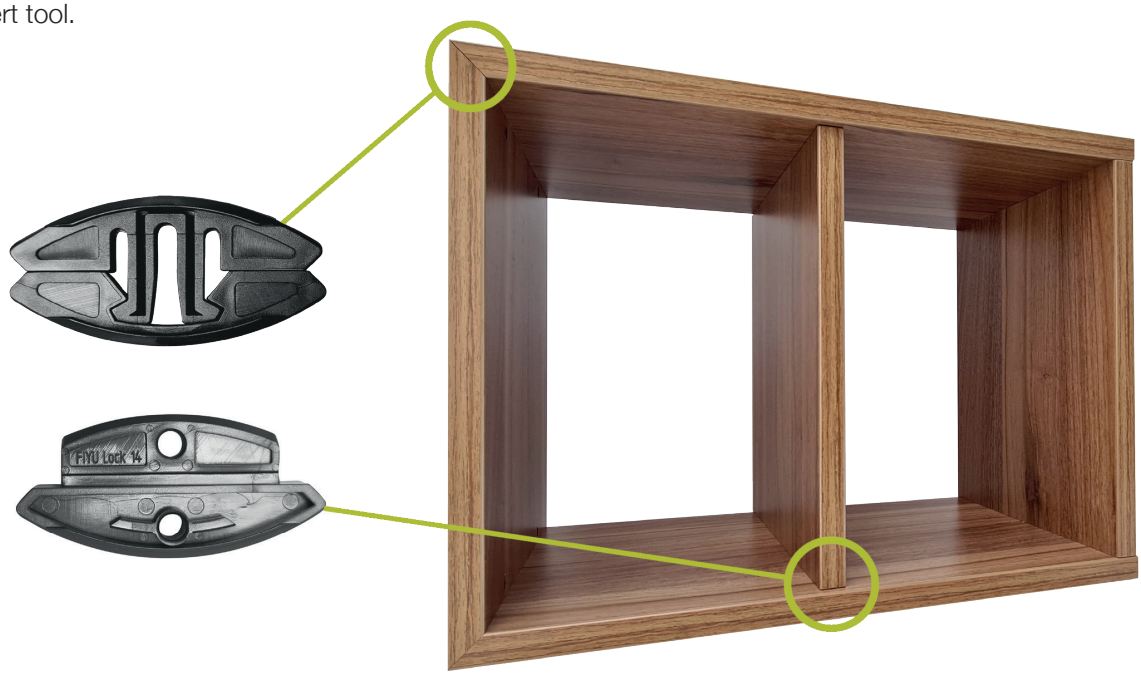

Usage	For cabinets, intermediate shelves, 45 ° miter joints, partition walls, the installation of shelves as well as retrofitting shelves, frames, covers and profile strips.
Advantage	Concealed, self-tightening, re-assemble tongue and groove connector, immediately ready for use.
Choice of Material	All woods, synthetic materials (FIYU® LOCK), from a panel thickness of 16 mm; All softwood and uncoated plastic materials (FIYU® FAST)
Processing	With CNC, flat dowel machine, adjust depth setting accurately, insert plug-in part and holding part into milled groove.
Attachment	Insert the connector flush with the edges and push the components into place.

t 01280 822062 **e** sales@qs-sales.com **www** questhardware.co.uk

FIYU® Connector versions

FIYU® LOCK	
155794	Half-moon shaped plug-in part



ACCESSORY	
BNN194	50 grub screw for 6 x 12mm



ACCESSORY	
KFA410	Insert tool

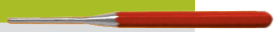

FIYU® FAST	
155792	FIYU® FAST

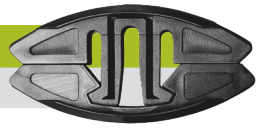

ACCESSORY	
HTZG204	3mm Allen key



FIYU® Trial Box

ENQUIRE	TRIAL BOX - includes: 100 FIYU® LOCK plug-in parts 100 FIYU® FAST connectors 50 grub screw 6x12 mm



Other Knapp Connectors - **See page 254 of the Quest Catalogue**

Knapp Fast

- Concealed, self-tightening, dismountable connector, immediately ready for use.
- To plug-in trims, face frames, furniture and mouldings.
- Fastening by tapping along the radius of the cutting edges on both sides, and optional gluing.



KNAPP FAST JOINERY CONNECTOR	
KFA406	50 Pack
KFA407	100 Pack

Knapp Silver

- Concealed, self-tightening, dismountable with integrated locking stop, immediately resistant to loads.
- For cabinet furniture, gluing aid for miter joints and corners without clamps.
- Fastening by tapping along the radius.



KNAPP SILVER JOINERY CONNECTOR	
KFA406	50 Pack
KFA407	100 Pack

Knapp Sunny

- Concealed, self-tightening, dismountable connector with integrated locking tabs.
- For cabinet furniture, gluing aid of miter joints and corners without clamps.
- Fastening by tapping along the radius of the cutting edges on both sides.



KNAPP SUNNY JOINERY CONNECTOR	
KFA400	50 Pack
KFA401	250 Pack

Knapp Metal

- Concealed, self-tightening, dismountable connector with integrated locking stop.
- For cabinet and frame furniture, door frames to be plugged-in without clamps, for miter joints.
- Fastening with PH screws.



KNAPP METAL JOINERY CONNECTOR	
KFA412	50 Pack

Knapp Champ

- Concealed, self-tightening, dismoutable connector.
- For cabinet furniture, glueing aid for miter joints and corners without clamps.



KNAPP CHAMP JOINERY CONNECTOR	
KFA404	50 Pack
KFA405	250 Pack

Knapp Adhesive PU+

- Fastening using the KNAPP® Adhesive PU+



KNAPP ADHESIVE PU+	
KFA454	Knapp PU+

Key

- W — Wood to wood Connection
- Assembly from above
- Concealed
- Allow prefabrication in workshop
- Without clamps